PART NO. 16-06-0005

ENG. NO. SP-575-125

BN 6 16

NOTES:

1. MAX. OUT OF ROUNDNESS FOR ANY DIA. (0.08)/.003.
2. ALL DIA. MUST BE MEASURED BY RING GAGE.
3. VENDOR: THE BEAD CHAIN MFG. CO. BRIDGEPORT, CONN.

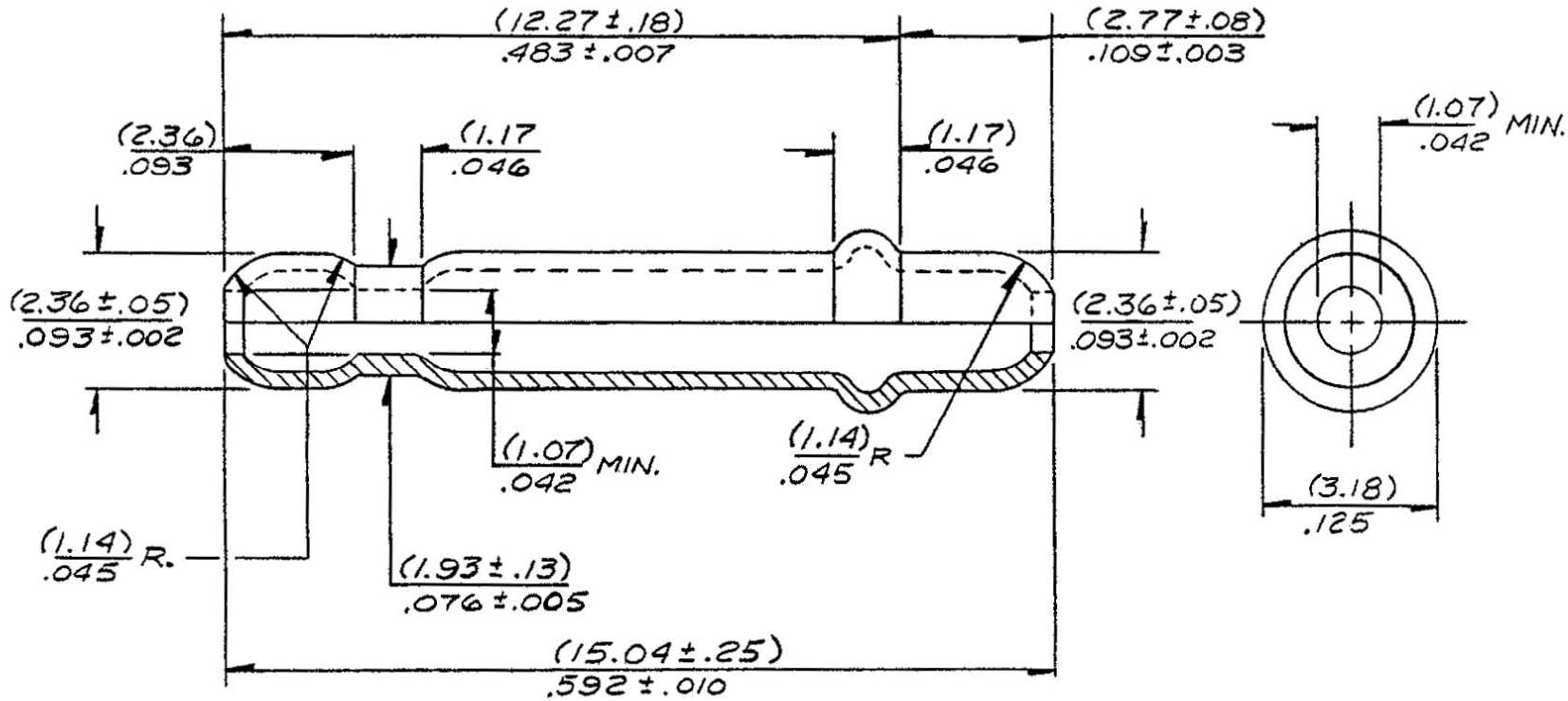

MAT'L: 70/30 BRASS

FINISH: ELECTRO TIN PLATE (0.00508)/.000200 MIN. PER E.S.-88-125.

LTR.	REVISIONS	
B	R93-12 WAS R93-12G ECR U8 2299 SP 12-5-88	
A	REL. FOR PRODUCT PER ERO # 20888 B.J. 8-5-85 JCS	

DIMENSION SHOWN (METRIC)/INCH

UNLESS OTHERWISE SPECIFIED TOLERANCE:

	INCH	METRIC
3 PLACE	±.006	
2 PLACE	±.010	±0.15
1 PLACE	—	±0.25
ANGULAR	1/2°	

DRAFT WHERE APPLICABLE MUST REMAIN WITHIN DIMENSIONS UNLESS OTHERWISE SPECIFIED

DO NOT SCALE DRAWING

DRWG BY JCS | CHK'D BY | APP'D BY | SCALE .8X1

TITLE: BEAD PIN TERMINAL REF. R93-12

MOLEX INCORPORATED LISLE, ILL. 60532 U.S.A.

DATE 8-6-85

PART NO. 16-06-0005 | ENG. NO. SP-575-125 | REV

ATWB

THIS DRAWING CONTAINS INFORMATION THAT IS PROPRIETARY TO MOLEX INC. AND SHOULD NOT BE USED WITHOUT WRITTEN PERMISSION.